This drawing, specifications, and concepts contained here in are the sole property of Red Barn Machine, and may not be reproduced or used in any fashion without the prior written permission of Red Barn Machine.

REVISIONS				
REV	DESCRIPTION	DATE	INITIAL	APPROVED

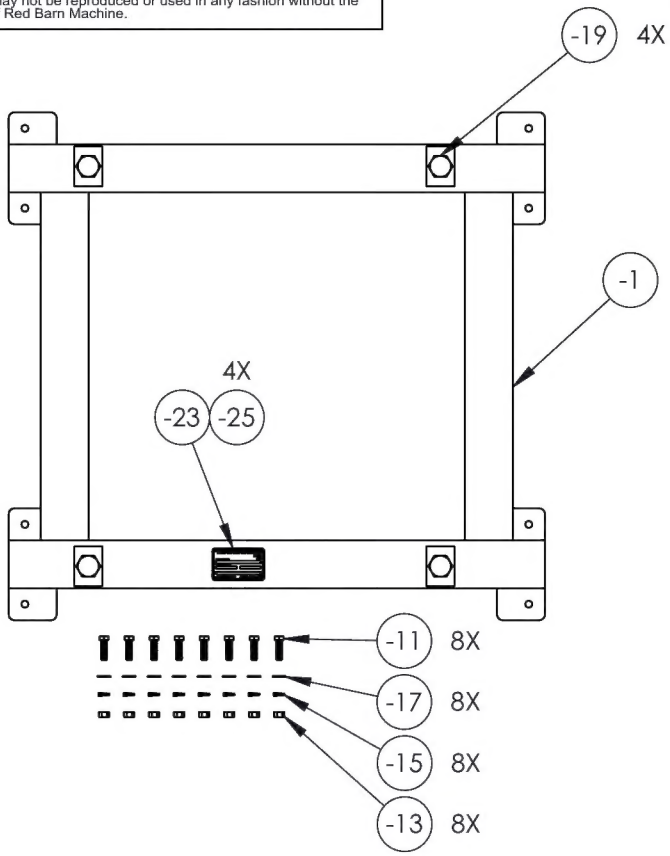

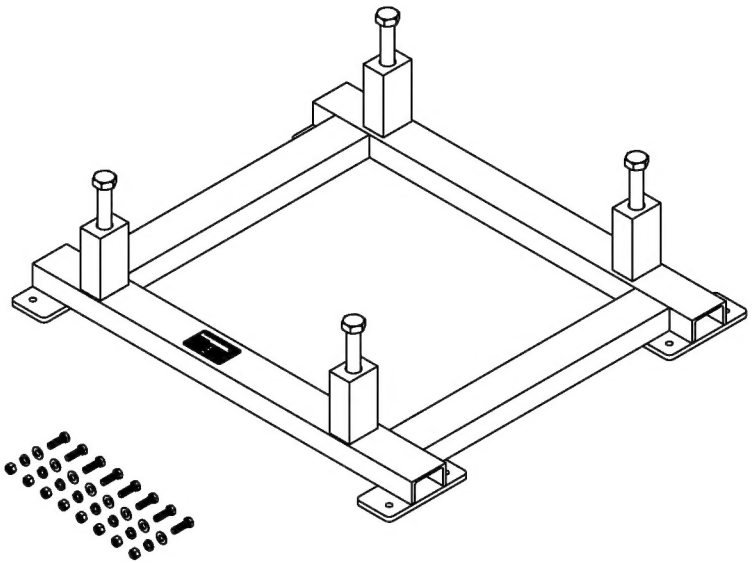

ASSY QTY	ASSY QTY	B/O	Part #	UNIT QTY	Description	Material	B/O INFORMATION OR SPECIFICATIONS	PG.
	X		-1		WELDMENT			2
	2		-3		FRAME	6061	CHANNEL 3 X .170 X 33-5/8	3
	2		-5		CHANNEL	6061	CHANNEL 3 X .170 X 21-7/8	4
	4		-9		BLOCK	6061	2 X 2-1/2 X 4-7/8	5
	4		-7		FOOT	6061	3/8 X 3-1/8 X 7-1/8	6
		B/O	-11	8	HEX HEAD CAP SCREW	STEEL	3/8-16 X 1-1/4 MCMASTER-CARR #95362A304	1
		B/O	-13	8	3/8-16 HEX NUT	STEEL	3/8-16 MCMASTER-CARR # 94191A300	1
		B/O	-15	8	LOCK WASHER	STEEL	3/8 MCMASTER-CARR #91102A760	1
		B/O	-17	8	FLAT WASHER	STEEL	3/8 MCMASTER-CARR # 90108A917	1
		B/O	-19	4	HEX HEAD CAP SCREW	STEEL	7/8-9 X 7 MCMASTER-CARR #91257A929	1
		B/O	-21	1	BOLT BAG	COTTON	3-1/4 X 5 MCMASTER-CARR #1925T61	NS
		B/O	-23	1	RED BARN PLACARD	ALUMINUM	RB41009	1
		B/O	-25	4	#2 DRIVE SCREW	COATED STEEL	1/8 MCMASTER-CARR #90081A074	1
	ASSY -1							

RB RED BARN MACHINE

TITLE
XMSN ADAPTER-MOUNT ASSEMBLY

DWG NO. RB SWE1382-21 REV

MAT'L

DRAWN BY: MARPET

APPROVED D Weil

UNLESS OTHERWISE SPECIFIED DIMENSIONS ARE IN INCHES
.XXX ± .005
.XX ± .01
.X ± .1
FRACTIONS ± 1/32
ANGLES ±.5°

1. BREAK ALL SHARP EDGES .015 x 45° OR .015R
2. DIMENSIONAL LIMITS APPLY AFTER PLATING

HEAT TREAT
FINISH
SPEC

USED ON MODEL
BELL 204, 205, 212, 412

SCALE 1:12 DATE 2/28/2013 SHEET 1 OF 6

This drawing, specifications, and concepts contained here in are the sole property of Red Barn Machine, and may not be reproduced or used in any fashion without the prior written permission of Red Barn Machine.

REVISIONS				
REV	DESCRIPTION	DATE	INITIAL	APPROVED

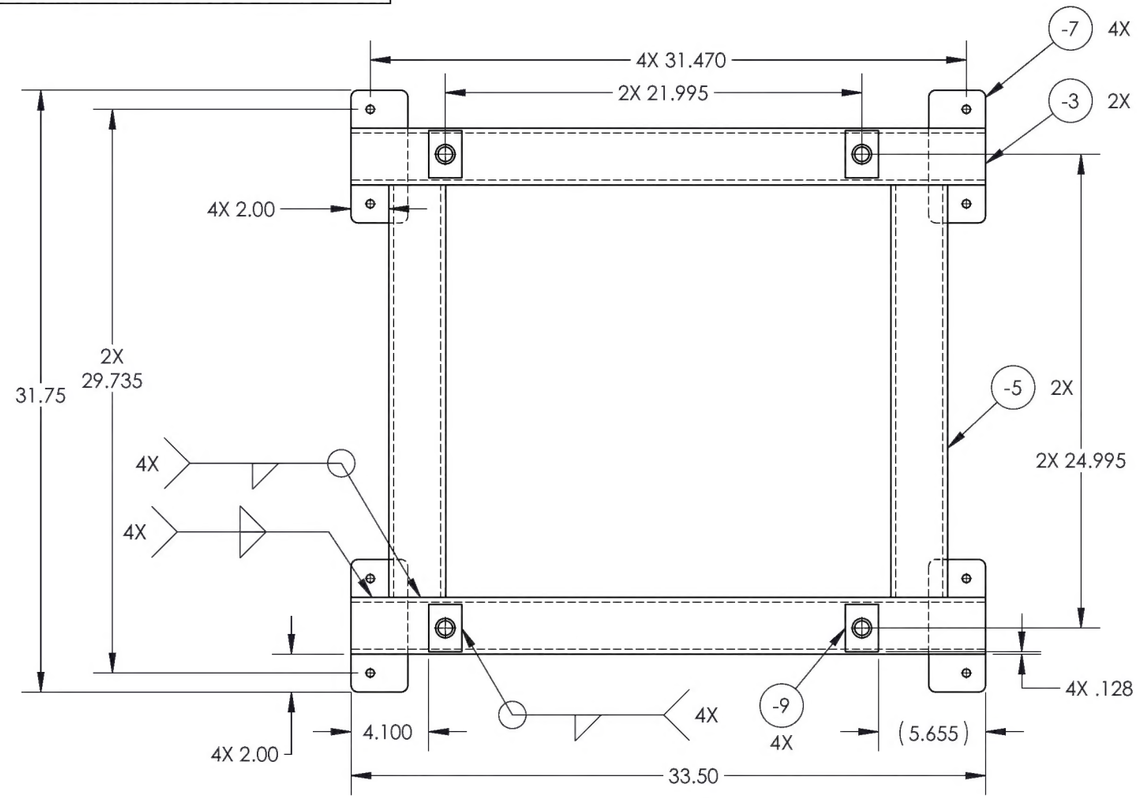

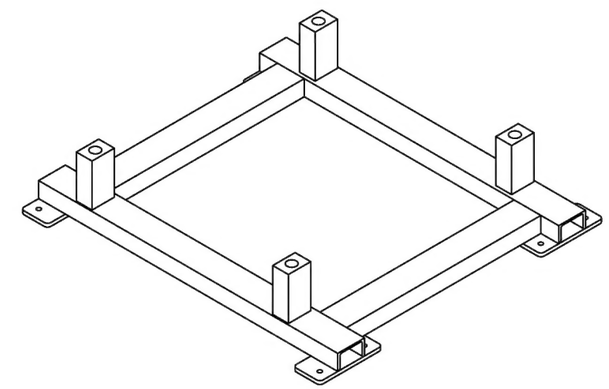

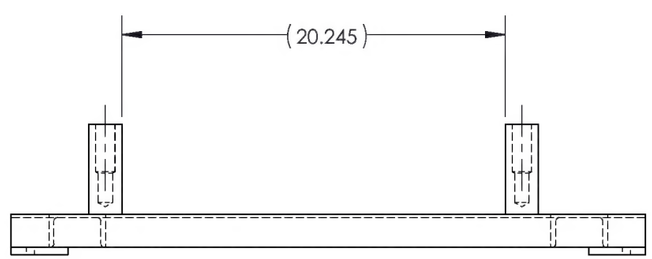

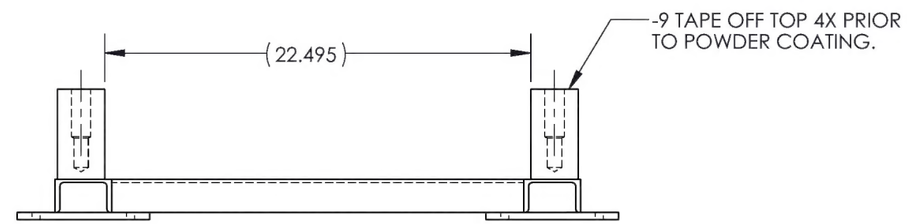

-1
WELDMENT

RED BARN MACHINE

TITLE
XMSN ADAPTER- MOUNT ASSEMBLY

DWG NO. RB SWE13832-21-1			REV
MAT'L	DRAWN BY: MARPET		
UNLESS OTHERWISE SPECIFIED DIMENSIONS ARE IN INCHES .XXX ± .005 FRACTIONS ± 1/32 .XX ± .01 ANGLES ±.5° .X ± .1 1. BREAK ALL SHARP EDGES .015 x 45° OR .015R 2. DIMENSIONAL LIMITS APPLY AFTER PLATING	APPROVED D Weil HEAT TREAT FINISH POWDER COAT YELLOW SPEC FED #13538 USED ON MODEL BELL 204, 205, 212, 412		
SCALE 1:8	DATE 2/28/2013	SHEET 2 OF 6	

This drawing, specifications, and concepts contained here in are the sole property of Red Barn Machine, and may not be reproduced or used in any fashion without the prior written permission of Red Barn Machine.

REVISIONS				
REV	DESCRIPTION	DATE	INITIAL	APPROVED

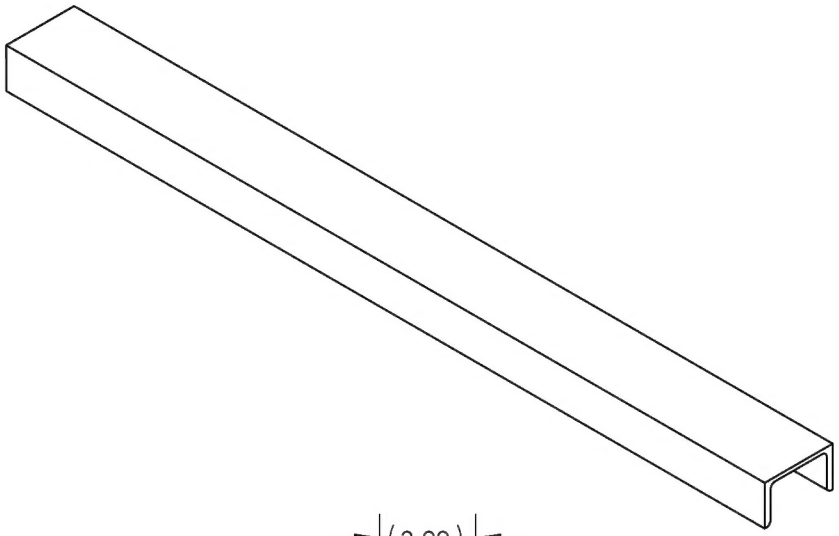

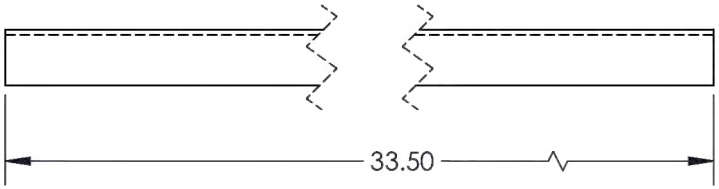

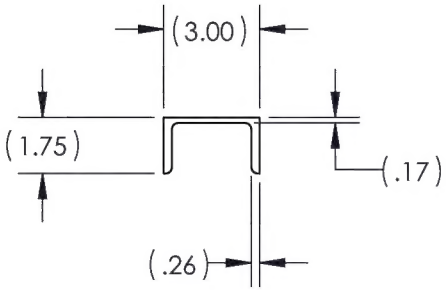

-3

FRAME

RED BARN MACHINE

TITLE
XMSN ADAPTER-MOUNT ASSEMBLY

DWG NO. RB SWE13832-21-3 REV

MAT'L 6061

DRAWN BY: MARPET

APPROVED D Weil

HEAT TREAT

FINISH SEE WELDMENT

SPEC

UNLESS OTHERWISE SPECIFIED DIMENSIONS ARE IN INCHES
.XXX ± .005
.XX ± .01
.X ± .1
FRACTIONS ± 1/32
ANGLES ±.5°

1. BREAK ALL SHARP EDGES .015 x 45° OR .015R
2. DIMENSIONAL LIMITS APPLY AFTER PLATING

USED ON MODEL
BELL 204, 205, 212, 412

SCALE 1:6 | DATE 2/28/2013 | SHEET 3 OF 6

This drawing, specifications, and concepts contained here in are the sole property of Red Barn Machine, and may not be reproduced or used in any fashion without the prior written permission of Red Barn Machine.

REVISIONS				
REV	DESCRIPTION	DATE	INITIAL	APPROVED

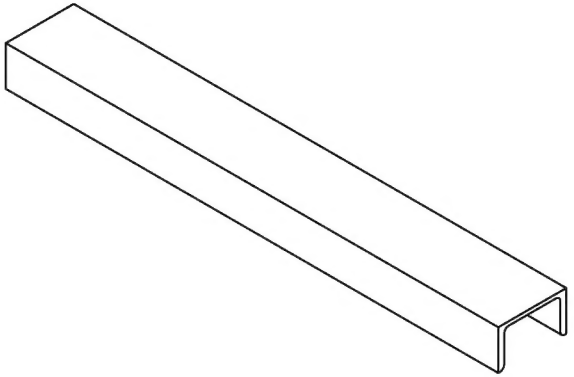

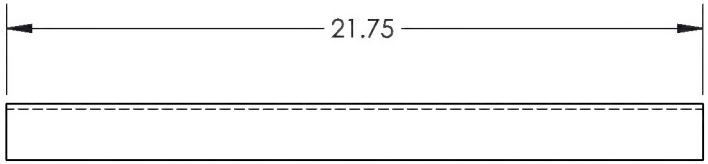

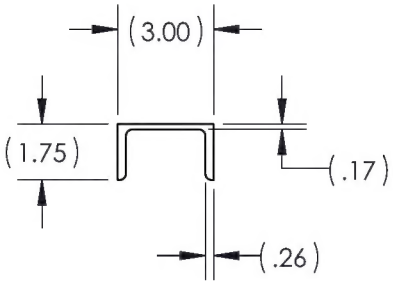

-5

CHANNEL

RED BARN MACHINE

TITLE
XMSN ADAPTER-MOUNT ASSEMBLY

DWG NO. RB SWE13832-21-5 REV

MAT'L 6061

DRAWN BY: MARPET

APPROVED D Weil

HEAT TREAT

FINISH SEE WELDMENT

SPEC

UNLESS OTHERWISE SPECIFIED DIMENSIONS ARE IN INCHES
.XXX ± .005
.XX ± .01
.X ± .1
FRACTIONS ± 1/32
ANGLES ±.5°

1. BREAK ALL SHARP EDGES .015 x 45° OR .015R
2. DIMENSIONAL LIMITS APPLY AFTER PLATING

USED ON MODEL
BELL 204, 205, 212, 412

SCALE 1:6 | DATE 2/28/2013 | SHEET 4 OF 6

This drawing, specifications, and concepts contained here in are the sole property of Red Barn Machine, and may not be reproduced or used in any fashion without the prior written permission of Red Barn Machine.

REVISIONS				
REV	DESCRIPTION	DATE	INITIAL	APPROVED

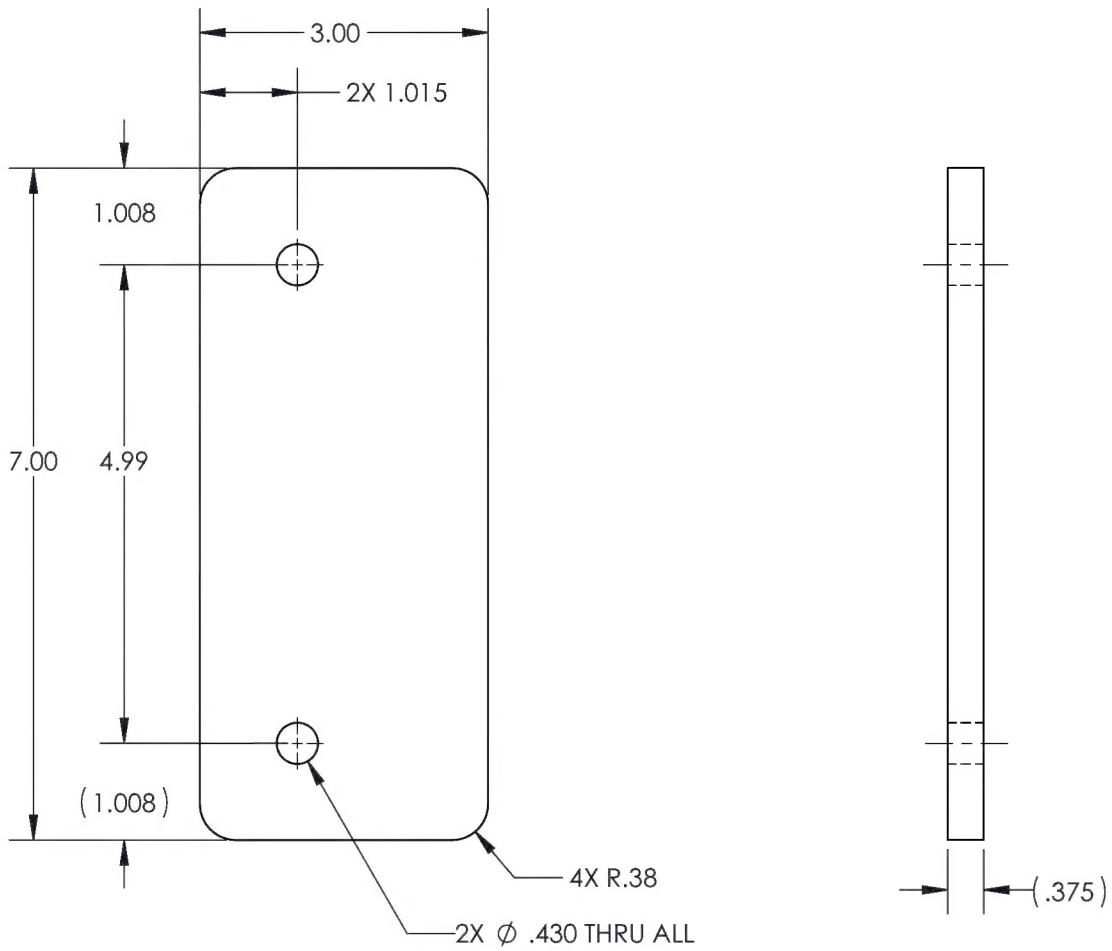

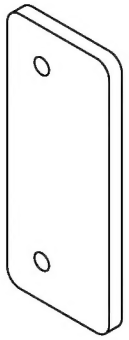

-7

FOOT

RED BARN MACHINE

TITLE
XMSN ADAPTER-MOUNT ASSEMBLY

DWG NO. RB SWE13832-21-7 REV

MAT'L 6061

DRAWN BY: MARPET

APPROVED D Weil

HEAT TREAT

FINISH SEE WELDMENT

SPEC

UNLESS OTHERWISE SPECIFIED DIMENSIONS ARE IN INCHES
.XXX ± .005
.XX ± .01
.X ± .1
FRACTIONS ± 1/32
ANGLES ±.5°

1. BREAK ALL SHARP EDGES .015 x 45° OR .015R
2. DIMENSIONAL LIMITS APPLY AFTER PLATING

USED ON MODEL
BELL 204, 205, 212, 412

SCALE 1:2 | DATE 2/28/2013 | SHEET 5 OF 6

This drawing, specifications, and concepts contained here in are the sole property of Red Barn Machine, and may not be reproduced or used in any fashion without the prior written permission of Red Barn Machine.

REVISIONS				
REV	DESCRIPTION	DATE	INITIAL	APPROVED

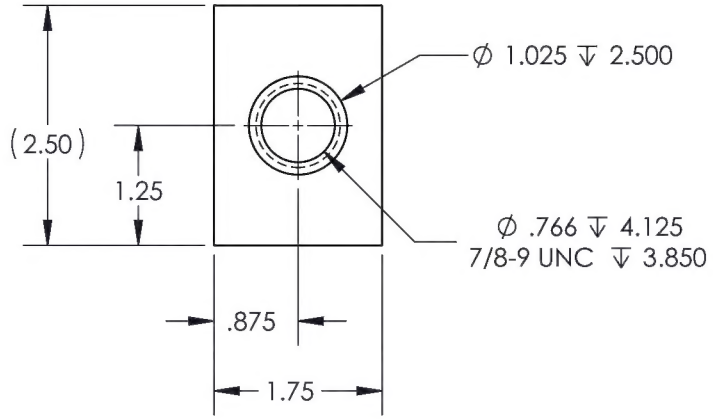

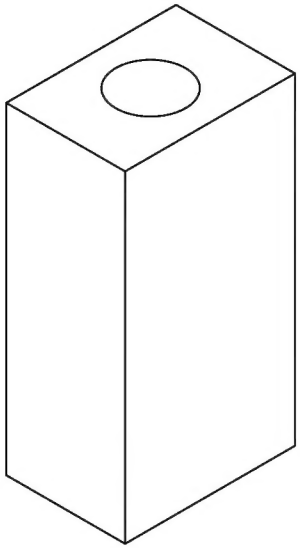

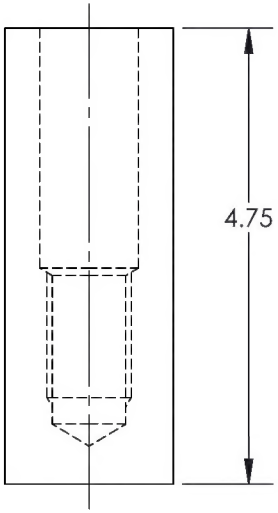

(-9)

BLOCK

RED BARN MACHINE

TITLE
XMSN ADAPTER-MOUNT ASSEMBLY

DWG NO. RB SWE13832-21-9 REV

MAT'L 6061

DRAWN BY: MARPET

UNLESS OTHERWISE SPECIFIED DIMENSIONS ARE IN INCHES
.XXX ± .005
.XX ± .01
.X ± .1
FRACTIONS ± 1/32
ANGLES ±.5°

1. BREAK ALL SHARP EDGES .015 x 45° OR .015R
2. DIMENSIONAL LIMITS APPLY AFTER PLATING

APPROVED D Weil

HEAT TREAT

FINISH SEE WELDMENT

SPEC

USED ON MODEL
BELL 204, 205, 212, 412

SCALE 1:2 | DATE 2/28/2013 | SHEET 6 OF 6